FMOS IRS1 Power Distribution Scheme (20061027)

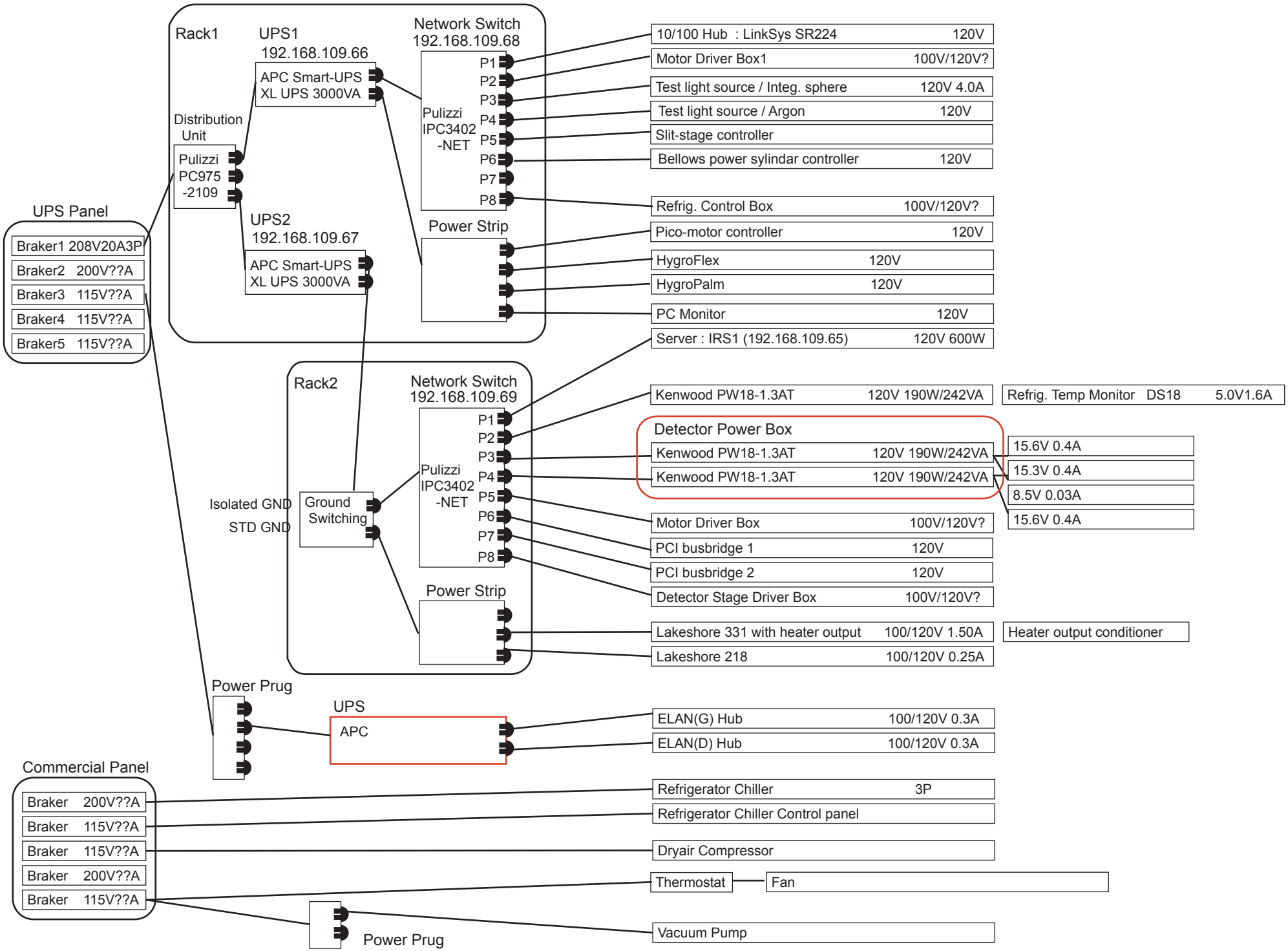

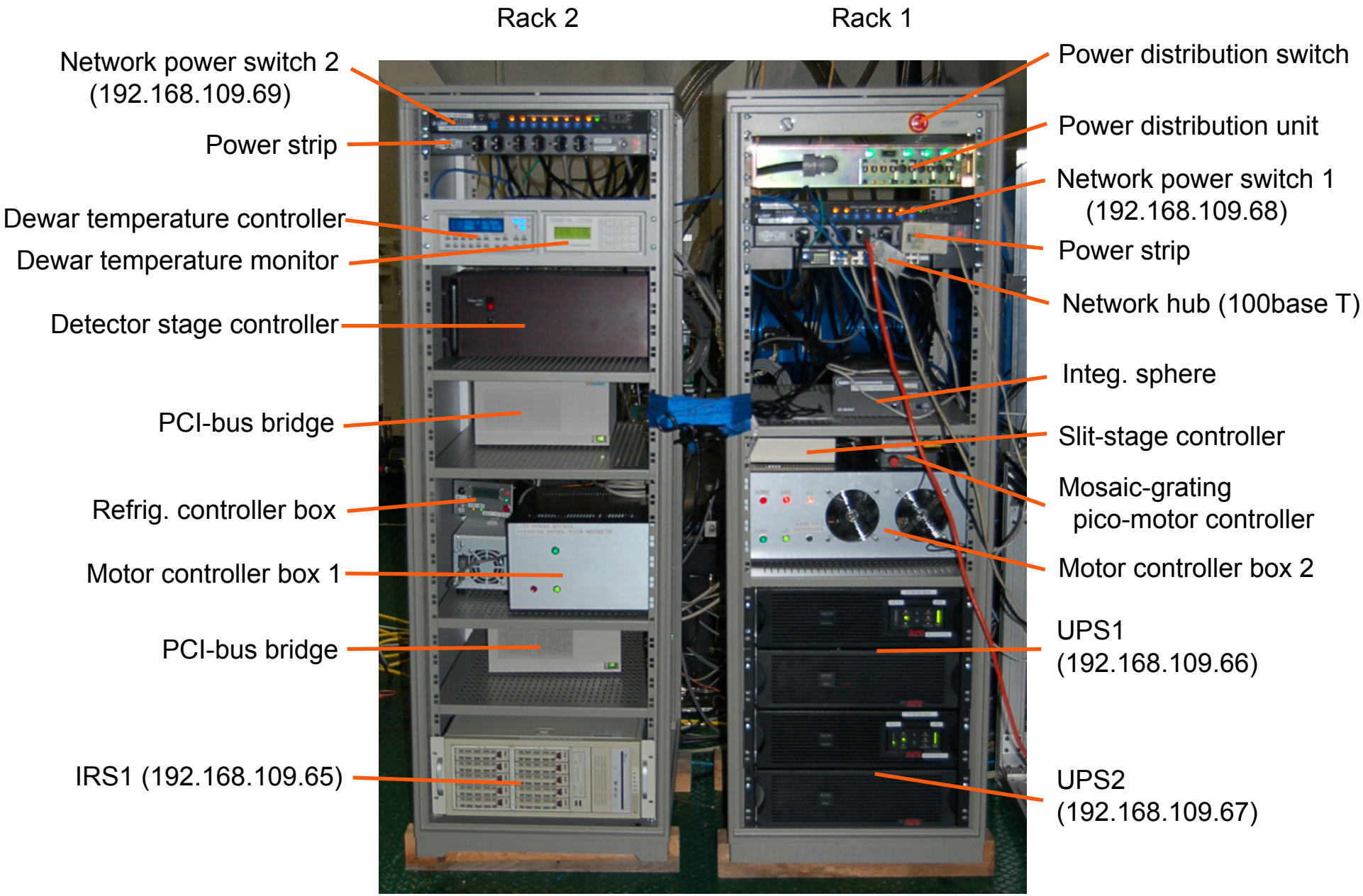
Rack 2
Rack 1
Network power switch 2 (192.168.109.69)
Power strip
Dewar temperature controller
Dewar temperature monitor
Detector stage controller
PCI-bus bridge
Refrig. controller box
Motor controller box 1
PCI-bus bridge
IRS1 (192.168.109.65)
Power distribution switch
Power distribution unit
Network power switch 1 (192.168.109.68)
Power strip
Network hub (100base T)
Integ. sphere
Slit-stage controller
Mosaic-grating pico-motor controller
Motor controller box 2
UPS1 (192.168.109.66)
UPS2 (192.168.109.67)